METHOD STATEMENT

STEP 1

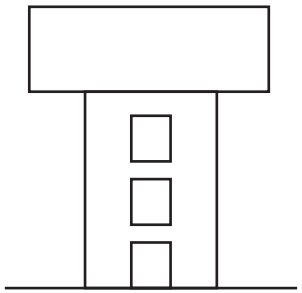

Core formwork must be ahead before commencing installation of Stairform formwork

STEP 2

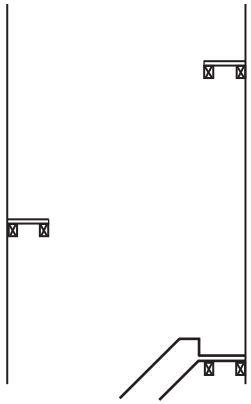

Complete construction of conventional formwork to landings

STEP 3

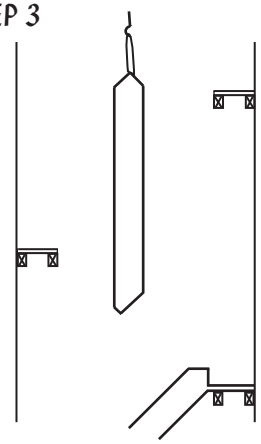

Install Stairform forwork using a chainblock from above

STEP 4

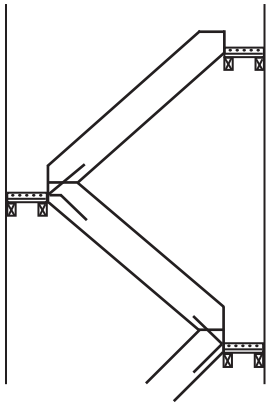

Complete reinforcement to landings

STEP 5

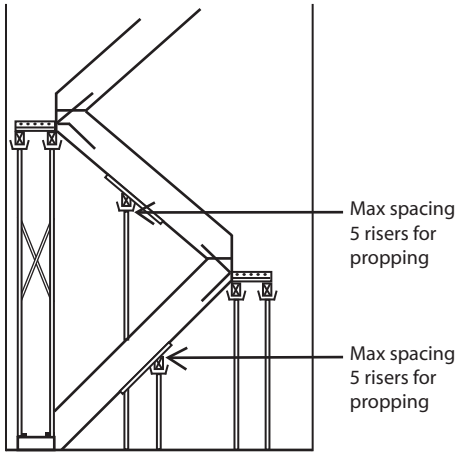

Backprop formwork
Every 5 risers- Maximum spacing

STEP 6

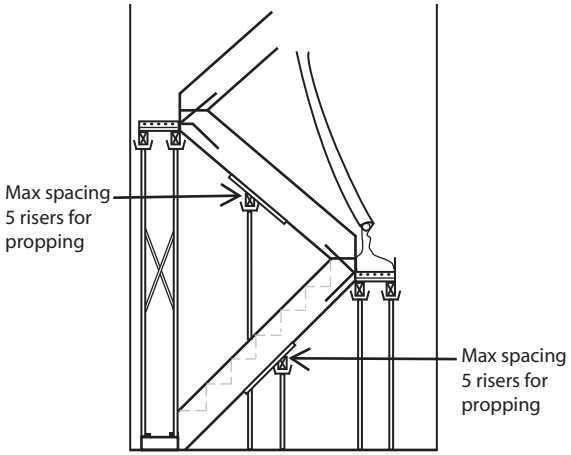

Cast concrete to stairs and landings

STEP 7

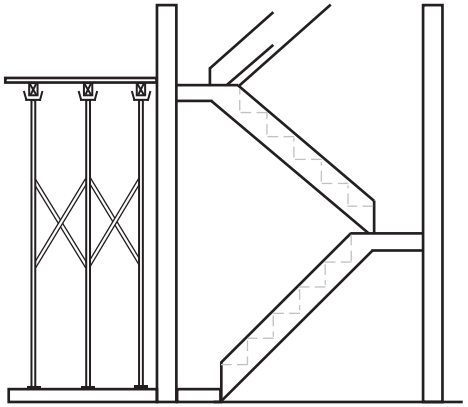

Once stairs and landings are cast, formwork can begin to main floor areas